QUANTUM® STORAGE SYSTEMS

(800) 685-4665
www.quantumstorage.com

ASSEMBLY INSTRUCTIONS
LOW PROFILE STERILE WRAP RACK

CONTENTS

REF.	QTY.	DESCRIPTION	REF.	QTY.	DESCRIPTION
1	2	MODIFIED U-HANDLE	H1	8	
1	1	SHELF	H2	4	
			H3	4	
1	3	SUPPORT BAR	H4	6	
			H5	15	
			H6	6	

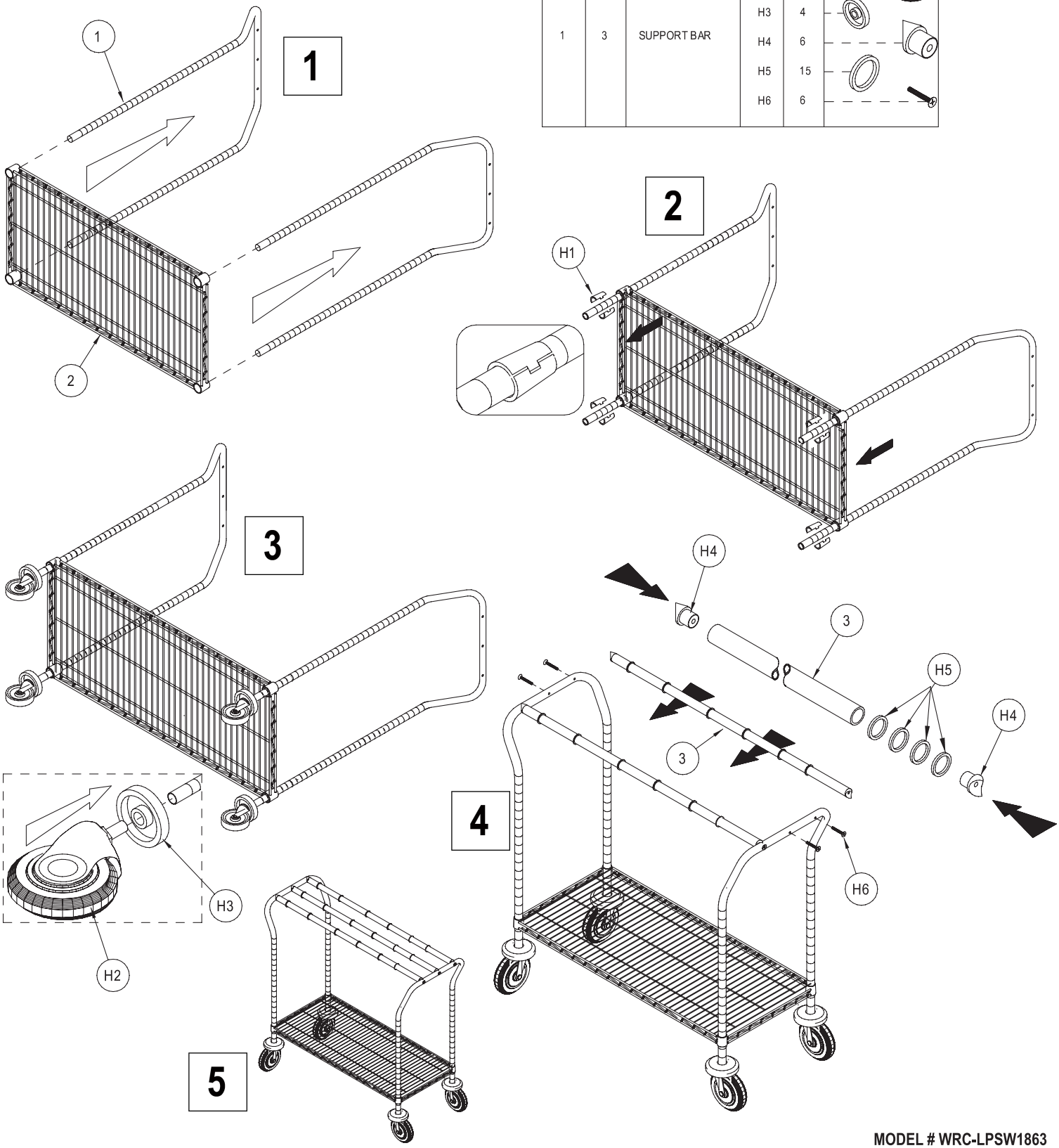

MODEL # WRC-LPSW1863

If any questions on assembly, please call Quantum Storage Systems at 1-800-685-4665