QUANTUM® STORAGE SYSTEMS

(800) 685-4665
www.quantumstorage.com

ASSEMBLY INSTRUCTIONS
WIRE BASKET UNIT

INSTRUCTIONS

1

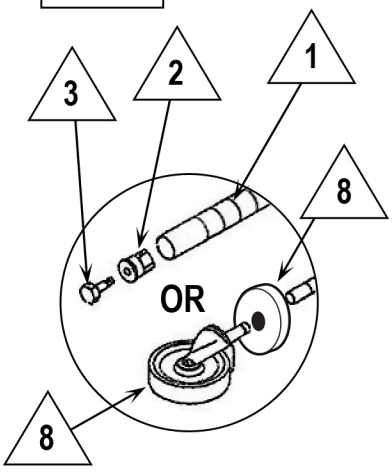

CONTENTS

REF.	QTY.	DESCRIPTION
1	4	POSTS
2	4	
3	4	
4	20	
5	2	SHELVES
6	3	BASKETS
7	12	COLLAR HOOK
8	4 & 4	CASTERS & DONUTS (Optional)

5

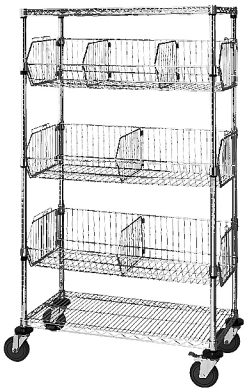

COMPLETED WIRE BASKET UNIT
(Optional Mobile Kit Shown)

2

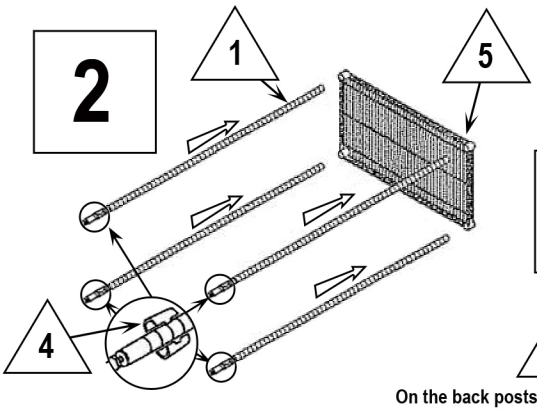

3

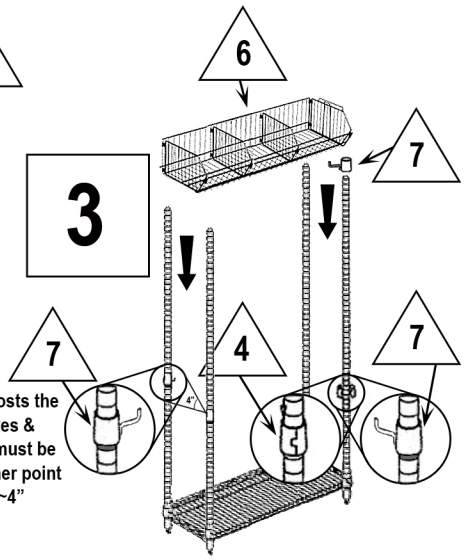

On the back posts the Clipping Sleeves & Collar Hooks must be place at a higher point than the front ~4"

4

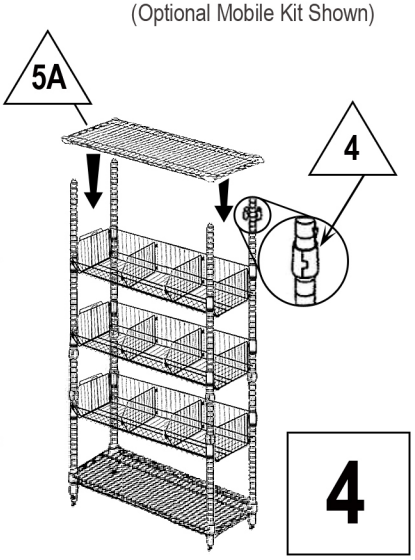

MODULAR WIRE BASKETS INSTRUCTIONS

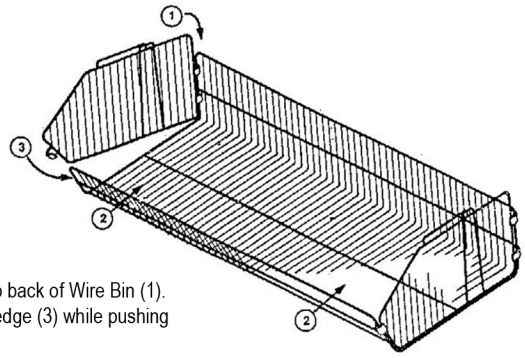

STACKING WIRE BIN

A) Hook Side Panel onto back of Wire Bin (1). then hock onto front edge (3) while pushing front of Bin in (2).

B) Repeat for opposite Side Panel.

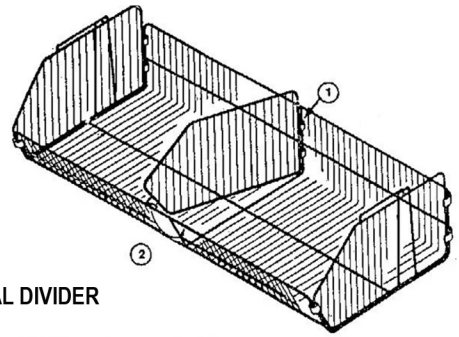

OPTIONAL DIVIDER

Hook Optional Divider onto rear wire (1). then hook onto front wire (2).

If any questions on assembly, please call Quantum Storage Systems at 1-800-685-4665